2025

H-193/MP/000- Ampa Bay Project Summary

Robert Bostwick

Geological Engineer

B. Eng – Geological Engineering

MSc. – Natural Resources Mng

Contact: 656-9507

3/4/2025

Contents

Executive summary 4
Overview of the Project Proponent 5
Extensive Industry Experience 7
Capabilities in Quarry Operations 8
Environmental Stewardship 8
Local Economic Contributions 8
Location and Access Overview H-193/MP/000 9
Geographical Location 9
Access to the Project Site 9
Barge and Boat Access via the Essequibo River: 9
Strategic Advantages of Location: 9
Description of block H-193/MP000 9
Location and Access Map 12
Geological Interpretation of Sand and Loam Deposits in the Ampa Bay Area, Guyana 13
Regional Geology 13
Key Geological Features 13
Local Geology and Formation of Sand and Loam Deposits 13
Economic and Industrial Potential 15
Hydrology and Water Table 15
Topography and Surface Features 15
Stratigraphy 15
Mineral Composition 16
Key Operational Features 16
Overview of Quarry Operations Using Open-Pit Mining Method 16
1. Quarry Operations Overview 16
2. Key Equipment Used in the Quarry 17
3. Loading and Transportation of Material 17
4. Material Handling and Stockpiling 18
5. Safety and Environmental Management 18

6. Reclamation and Land Rehabilitation 18
Environmental Management Plan (EMP) 19
Dust and Noise Control 19
Land Rehabilitation 19
Water Management 19
Occupational Safety and Health (OSH) Plan 19
Personal Protective Equipment (PPE) 19
Equipment Safety 19
Emergency Response Plan 19
Health Monitoring 20
Socio-Economic Benefits of the project 20
1. Job Creation and Employment Opportunities 20
2. Skills Development and Training 21
3. Contribution to Local Infrastructure Development 21
4. Revenue Generation and Economic Growth 22
5. Community Engagement and Development 22
6. Environmental Sustainability and Land Reclamation 22
7. Long-Term Economic Stability 23
Need for the Project 24
Uses of Sand and Loam in the Construction Sector 24
Closing the Supply-Demand Gap for Construction Materials 25
Reserve Estimation 25
Futuristic Approach 26
1. GPS-Enabled Fleet Management and Equipment Tracking 26
2. Real-Time Data Monitoring and Predictive Maintenance 27
3. Drones for Site Surveying and Monitoring 27
4. Advanced Dust Control Systems 27
5. Energy-Efficient Machinery and Renewable Energy Solutions 28
6. Water Management Systems 28
7. Digital Twin Technology for Operational Optimization 28
8. Worker Safety Technologies 29
9. Automated Reporting and Compliance Management 29
Financial Summary 30

Appendices 31
Appendix 1 – Image of Proposed Fuel Storage Tank 31
Appendix 2- Cross-Sectional View of Containment Structure 32
Appendix 3- Conceptual Representation of Closure 33
Appendix 4- Conception Sequence of Reclamation 34

PROJECT INFORMATION

PROJECT PROFILE

PROJECT NAME	LAKERAM SINGH HARRIDAT SAND AND LOAM PROJECT
NATURE OF PROJECT	QUARRYING OF SAND & LOAM
PROJECT LOCATION	Tract of state land located in the Coastal Area as shown on Terra Surveys Topographic Map 27NE, at scale 1:50,000 with reference point 'X' located at the confluence of the Essequibo River and Ampa Creek with geographical coordinates of Longitude 58º34'31"W and Latitude 6º30'21"N
PROJECT SIZE	Property Size: 740 Acres
PROPONENT'S NAME	LAKERAM SINGH HARRIDAT
OFFICE ADDRESS	LOT 5 UNITY EAST BANK ESSEQUIBO
AUTORIZED SIGNATORY	LAKERAM SINGH HARRIDAT
CONTACT DETAILS	TEL: (592) 262-0095/ 698-7614

Executive summary

Mr. Lakeram Harridat has applied for a mining permit from the Guyana Geology and Mines Commission under file number H-193/MP/000/2016 to operate a sand and loam quarry. This project document outlines the key operational features of the proposed quarry, focusing on the extraction of quarriable materials and the management practices required for safe and efficient operations.

The project area covers 740 acres and is located at Ampa Bay approximately 9 miles North of Bartica and 28 miles South of Parika. The quarry will operate 5 days per week, selling sand and loam at USD $9 per ton, with customers providing their own barge for material loading. The project's operational lifespan is set at 20 years, ensuring a long-term contribution to Guyana's growing construction and agricultural sectors. An estimated 130,000 metric tons of sand and loam can be extracted annually, supporting both local and international infrastructure demands.

Overview of the Project Proponent

The Lakeram Singh Harridat Sand and Loam Project, located in the Coastal Area of Guyana, involves the commercial extraction of sand and loam from a 740-acre tract of state land. The project aims to produce 130,000 tons of sand and loam annually over a 20-year mine life, operating five days a week on a single eight-hour shift. The extracted materials will be transported via barges and trucks to various coastal and regional locations for use in construction and industrial applications.

Key Components:

1. Mining Methods: The project will employ conventional truck and shovel methods for overburden stripping and sand/loam extraction. No drilling or blasting is required due to the soft ground conditions.

2. Equipment and Staffing: The project will utilize a fleet of light dump trucks, hydraulic excavators, and loaders. A total of 10 employees, including operators, foremen, and laborers, will be required for efficient operations.

Environmental Management Plan (EMP):

The EMP outlines measures to minimize environmental impacts during construction, operation, and closure phases. Key objectives include:

- Compliance with environmental regulations.
- Sustainable management of operations.
- Minimization of noise, air quality, and water resource impacts.
- Rehabilitation of disturbed areas post-mining.

Key Environmental Impacts and Mitigation:

1. Construction Phase: Potential impacts include noise, air quality degradation, soil erosion, and surface water contamination. Mitigation measures include sound suppression devices, dust control, erosion control structures, and spill prevention plans.

2. Operational Phase: Impacts include soil contamination, noise, dust generation, and solid waste production. Mitigation involves regular monitoring, dust suppression, waste management plans, and progressive rehabilitation.

3. Closure Phase: The project will focus on land rehabilitation, ensuring stable landforms, re-establishment of native vegetation, and long-term monitoring to ensure environmental integrity.

Water Management:

The project will implement a comprehensive water management strategy to control runoff, prevent contamination, and ensure compliance with water quality standards. Key features include sedimentation ponds, oil-water separators, and groundwater monitoring.

Biodiversity and Rehabilitation:

The project area, characterized by mixed tropical rainforest, will undergo progressive rehabilitation to restore native vegetation and minimize visual impacts. Rehabilitation strategies include topsoil management, direct seeding, and the establishment of native tree and shrub species.

Emergency Response Plan (ERP):

The ERP outlines procedures for handling emergencies such as fires, spills, gas leaks, and natural disasters. The plan includes evacuation protocols, communication strategies, and coordination with external emergency services.

Closure and Rehabilitation:

The closure plan aims to restore the site to its natural state, with a focus on creating a stable landform, re-establishing native vegetation, and ensuring long-term environmental sustainability. Rehabilitation will be conducted progressively, with final landforms designed to blend into the surrounding landscape.

The Lakeram Singh Harridat Sand and Loam Project is designed to be economically viable while adhering to strict environmental and social standards. Through careful planning, monitoring, and mitigation, the project aims to minimize its environmental footprint and leave a positive legacy for future generations.

Extensive Industry Experience

Lakeram Singh Harridat's management team brings a wealth of knowledge and practical experience to the project's operations. Having been involved in numerous quarrying projects, the personnel have gained expertise in:

- Efficient extraction techniques, particularly in open-pit mining for sand and loam.
- Managing large-scale, high-volume quarry operations, such as the current project, which targets an annual production of 130,000 metric tonnes.
- Implementing logistical and operational strategies that streamline production while maintaining environmental standards.

Capabilities in Quarry Operations

The project proponent is fully equipped to handle the complexities of sand and loam quarrying projects. The company's current project will utilize heavy machinery, including excavators and front-end loaders, to operate on a 8-hour basis, ensuring uninterrupted production. Key capabilities include:

- Excavation and loading: Efficiently removing sand and loam using modern equipment.
- Customer transportation: Allowing customers to provide their own Barges for material collection, reducing logistical burdens on the company.
- Sustainable mining practices: With a focus on minimizing environmental impact through dust control, noise reduction, and effective land reclamation.

Environmental Stewardship

The project proponent maintains a strong commitment to environmental sustainability. The company employs strict dust suppression measures, utilizes noise-dampening equipment, and follows guidelines for land reclamation after mining activities are completed. This approach not only ensures compliance with local environmental regulations but also demonstrates the company's dedication to responsible resource extraction.

Local Economic Contributions

The project proponent is dedicated to contributing to Guyana's economic growth. The sand and loam quarry project will provide local employment opportunities, helping to develop skills and boost the economy in the surrounding communities. The company actively engages with local stakeholders to ensure that its projects align with national development goals.

With over 20 years of combined experience in construction, sand and loam quarrying, Lakeram Singh Harridat is well-positioned to successfully execute this project. The proponent's operational efficiency, environmental responsibility, and commitment to local development make it a key player in Guyana's resource extraction industry.

Location and Access Overview H-193/MP/000

The project site, located within a 740-acre tract of state land near the confluence of the Ampa creek and Essequibo River, offers multiple access routes for efficient transportation of materials and personnel.

Geographical Location

- The project is situated on the Right bank of the Essequibo River, upstream of key logistical points, and is precisely located near Longitude 58°34'31"W and latitude 6°30'21"N.
- The proximity to major waterways makes this site well-positioned for transporting bulk via water routes.

Access to the Project Site

Barge and Boat Access via the Essequibo River:

Barges and boats can access the project site directly from the Essequibo River, traveling approximately 30 miles upstream of Parika. This river journey provides a reliable and efficient transportation route for bulk materials, reducing overland transport and improving the logistical flow.

Strategic Advantages of Location:

Proximity to the Essequibo River: The site's location along the Essequibo River offers excellent access for barges and boats, allowing for the movement of large quantities of sand and loam.

This strategic location to a major waterway positions the project site for seamless logistics and transport, supporting the efficient operation of the project.

Description of block H-193/MP000

Tract of state land located in the Coastal Area - No Mining as shown on Terra Surveys Topographic Map 27NE, at scale 1:50,000 with reference point "X" located at the confluence of Ampa Creek & Essequibo River with geographical coordinates of Longitude 58°34'31"W and latitude 6°30'21"N.

Thence at a true bearing of 121°, for a distance of approximately 2 miles 129 yards, to point of commencement:

Point A, located at geographical coordinates of longitude 58°32'58"W and latitude 6°29'25"N, thence at true bearing of 19°, for a distance of approximately 1 mile 544 yards, to Point B, located at geographical coordinates of longitude 58°32'35"W and latitude 6°30'30"N, thence at true bearing of 89°, for a distance of approximately 1647 yards, to Point C, located at geographical coordinates of longitude 58°31'46"W and latitude 6°30'30"N, thence at true bearing of 199°, for a distance of approximately 1 mile 563 yards, to Point D, located at geographical coordinates of longitude 58°32'9"W and latitude 6°29'25"N, thence at true bearing of 270°, for a distance of approximately 791 yards, to Point E, located at geographical coordinates of longitude 58°32'33"W and latitude 6°29'25"N, thence at true bearing of 270°, for a distance of approximately 850 yards, to the point of commencement at Point A.

Thus enclosing an area of approximately 740 acres, save and except all lands lawfully held or occupied

Location and Access Map

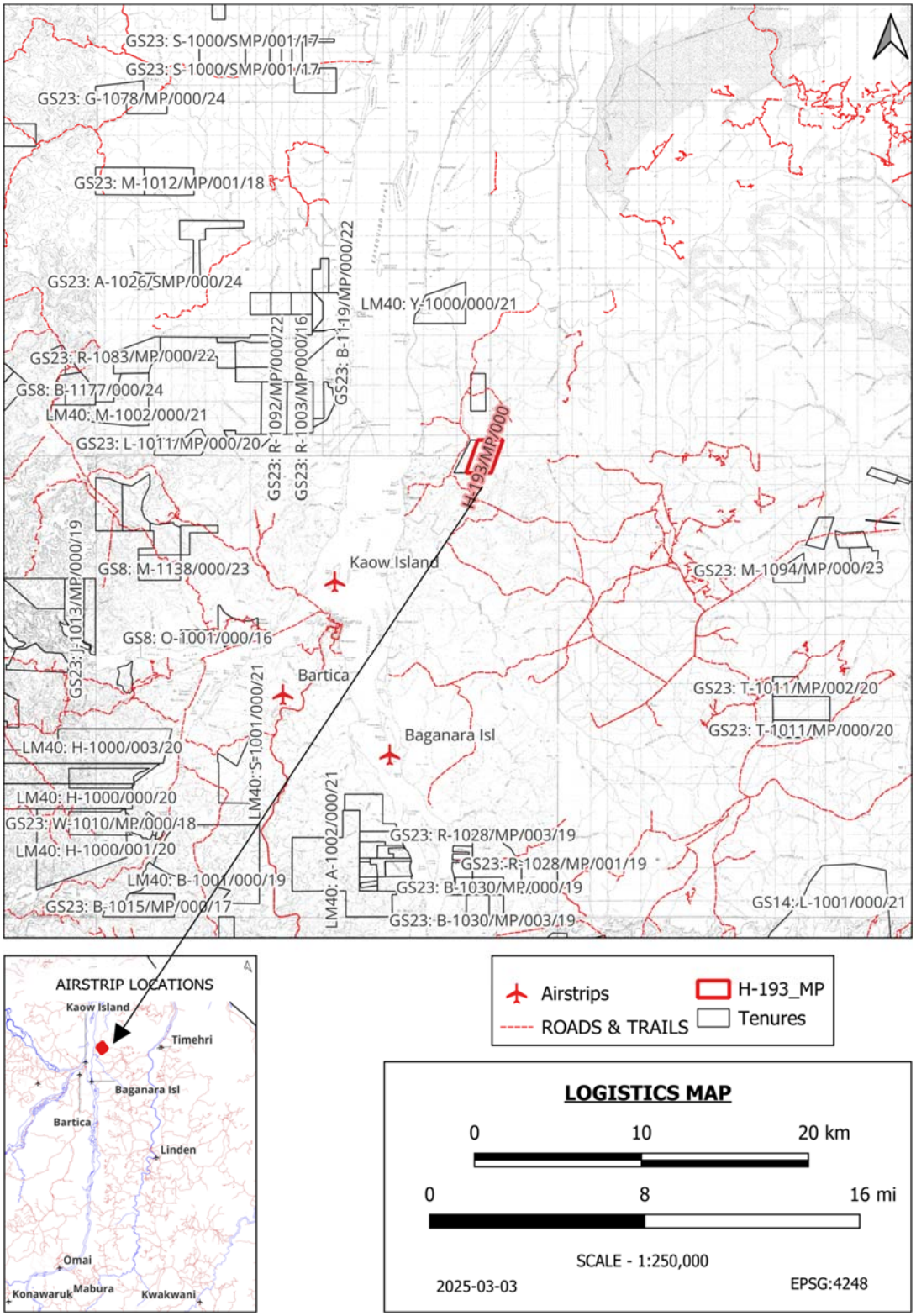

Geological Interpretation of Sand and Loam Deposits in the Ampa Bay Area, Guyana

Regional Geology

The Ampa Bay area is situated within the Guiana Shield, a stable Precambrian craton that extends across northern South America. While the shield is predominantly composed of ancient metamorphic and igneous rocks, extensive weathering, erosion, and sedimentation have contributed to the development of significant sand and loam deposits.

Key Geological Features

Key geological features influencing sand and loam deposition include:

Tropical Weathering Processes: The high rainfall and humid tropical climate of central Guyana lead to intense chemical weathering, resulting in deep lateritic profiles and extensive residual deposits.

Fluvial and Alluvial Systems: The Essequibo River and its tributaries play a major role in transporting and depositing sediments, forming thick layers of sand, clay, and loam in low-lying areas and floodplains.

Tertiary and Quaternary Sedimentation: Younger sedimentary deposits from the Tertiary and Quaternary periods overlay the Precambrian basement rocks, consisting of unconsolidated sands, loams, and gravels derived from weathered uplands.

Aeolian and Deltaic Processes: Periodic shifts in climate and river dynamics have resulted in the reworking of sediments, creating well-sorted sands and fine-grained loam deposits.

Local Geology and Formation of Sand and Loam Deposits

- Weathering of Granitic and Sedimentary Parent Rocks: The breakdown of feldspar-rich granites and quartzites contributes to the formation of loamy soils, which are rich in fine-grained silts and clays.
- Riverine and Alluvial Deposition: The proximity to the Essequibo River system facilitates the deposition of sand and loam through periodic flooding and sediment reworking.
- Glacial and Sea-Level Fluctuations: Historical changes in sea levels and glacial-interglacial cycles have influenced sedimentation patterns, leading to the accumulation of extensive sand plains.
- Lateritic Soil Development: In some areas, prolonged weathering has resulted in lateritic hard caps, beneath which loamy and sandy soils are preserved.

Geological Map of Project Area

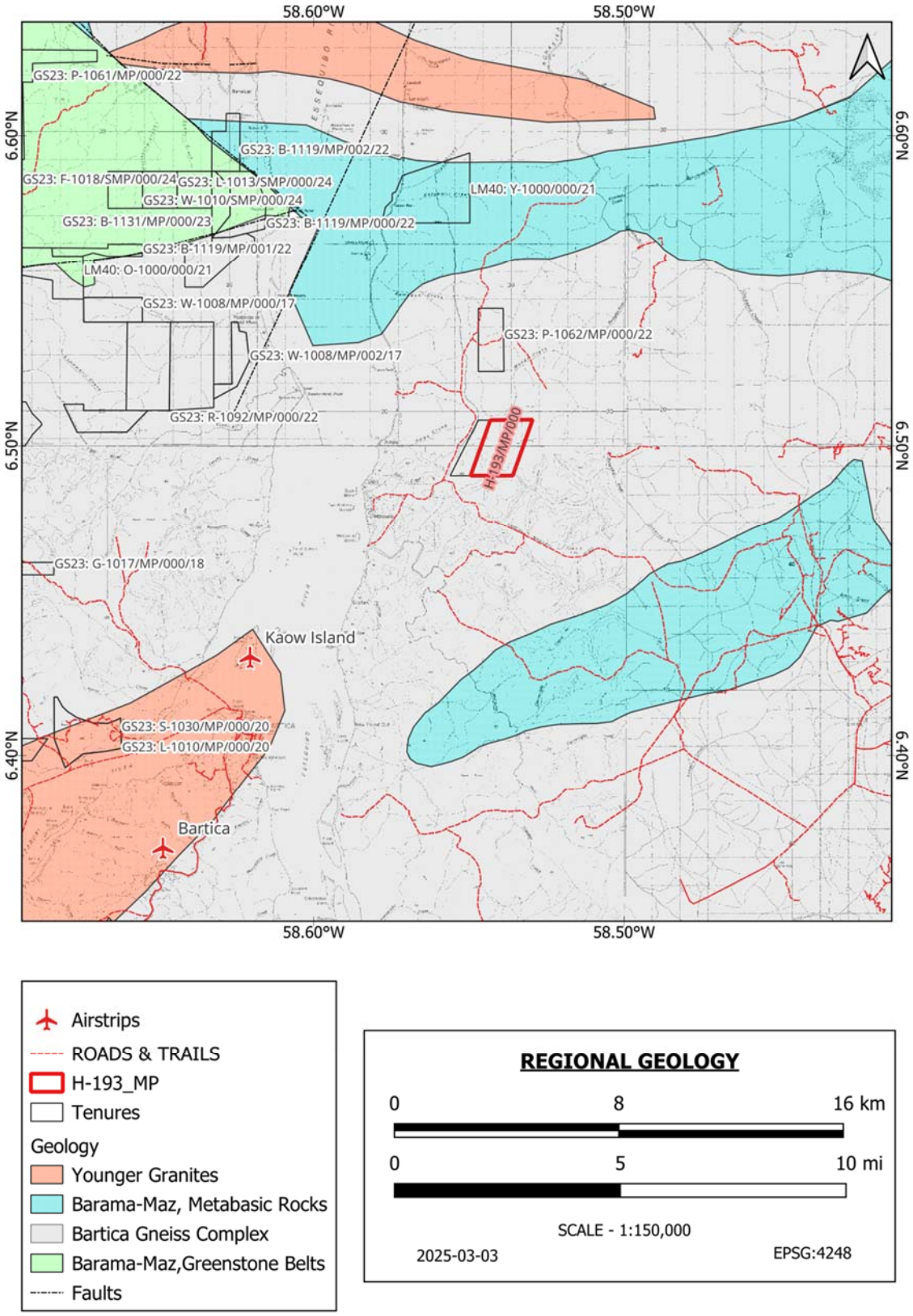

Economic and Industrial Potential

The presence of large sand and loam deposits in Ampa Bay presents opportunities for:

- Construction Material Extraction: High-quality sands can be used for concrete, asphalt, and general construction.
- Brick and Ceramic Manufacturing: Loam-rich soils provide an excellent raw material source for clay-based products.
- Agricultural Use: The loamy soils support sustainable agriculture due to their ability to retain moisture and nutrients.

The geological interpretation highlights the potential for resource extraction and land use planning in the Ampa Bay area.

Hydrology and Water Table

The Essequibo River plays a crucial role in shaping the geological characteristics of the area. The water table in the region tends to be relatively shallow due to the proximity of the river and nearby creeks, such as Ampa and Mango Creek. Seasonal changes, including the rainy season, can cause fluctuations in the water table.

- Water Table: The depth to the water table may vary but is generally not very deep. This factor is important to consider during extraction activities to avoid water intrusion into the quarry.
- Water Management: Proper drainage systems will be needed to manage surface runoff and prevent flooding of the quarry, particularly during the rainy season.

Topography and Surface Features

The topography of the project area is relatively flat, typical of the Coastal Plain. This flat terrain is beneficial for open-pit mining operations, as it simplifies the excavation and transport processes.

- Flat Terrain: The flat topography reduces the need for significant earthmoving operations and makes the area easier to navigate for heavy machinery.
- Surface Drainage: The project area's proximity to water bodies ensures good natural drainage, but careful management will be required to prevent soil erosion and maintain the integrity of the excavation site.

Stratigraphy

The stratigraphy of the project area includes a series of sedimentary layers formed by river deposition over time. These layers typically include:

- Topsoil: A thin layer of organic material, supporting vegetation.
- Sand and Loam Layers: Thick layers of sand and loam beneath the topsoil, which are the primary targets for extraction. These materials are easily accessible due to the shallow depth of the deposits.
- Clay: In some parts of the Coastal Plain, clay layers may be found beneath the sand and loam. While not typically the focus of quarrying in this area, clay may have potential uses in other industries.

Mineral Composition

The sand in the region is primarily composed of quartz grains, making it ideal for use in construction. Loam, due to its mixture of sand, silt, and clay, is versatile and highly sought after for both construction and agriculture.

This 740-acres project area on the Right bank of the Essequibo River is geologically well-suited for the extraction of sand and loam, both of which are abundant in the region's sedimentary deposits. The area's relatively flat topography and proximity to water bodies make it an ideal site for sustainable quarrying operations. Understanding the geological structure and hydrological features of the project site will be crucial in ensuring efficient extraction, proper water management, and long-term environmental sustainability.

Key Operational Features

Overview of Quarry Operations Using Open-Pit Mining Method

The open-pit mining method will be employed at the H-193/MP/000 Quarry for the efficient extraction of sand and loam. This method is suitable for the site's relatively flat terrain and shallow deposits of sand and loam. The operation will focus on the extraction, loading, and transportation of materials from the quarry site to barges located on the Right bank of the Essequibo River, ensuring seamless logistics from the quarry to market.

1. Quarry Operations Overview

The quarry will operate on a continuous 8-hour basis with rotating shifts to maximize production. The mining process will follow a well-defined sequence to ensure operational efficiency, worker safety, and minimal environmental impact.

a. Site Preparation and Clearing

Before extraction begins, the quarry site will be cleared of vegetation, and topsoil will be stockpiled for future land reclamation. Access roads within the site will be constructed to facilitate the movement of equipment.

b. Excavation

The open-pit mining method involves the removal of surface layers to access the sand and loam deposits beneath. The excavation process will use heavy-duty equipment to extract the materials efficiently.

2. Key Equipment Used in the Quarry

- The quarry will utilize a range of equipment to ensure smooth operations, from excavation to loading and transportation.
- Excavators: Large hydraulic excavators will be used to remove the sand and loam from the pit. These machines can dig to the required depth and are efficient in extracting large volumes of material.
- Front-End Loaders: Front-end loaders will be deployed to scoop the excavated material and transport it to the loading point near the Essequibo River for barge loading.
- Conveyor System: A conveyor system will be installed to transport the extracted sand and loam from the loading area on the riverbank. This system will reduce the need for multiple loading trips and ensure a continuous flow of material.
- Water Tankers: To control dust levels, water tankers will be used to regularly spray the roads and loading areas, ensuring compliance with environmental standards.
- Barge Loading Systems: A barge loading system, including a conveyor belt, will be set up at the riverbank. This will transfer the material directly from the stockpile or conveyor into the waiting barges, streamlining the loading process and reducing handling time.

3. Loading and Transportation of Material

Once the sand and loam are excavated and transported to the riverbank via the conveyor system, the material will be loaded onto barges for transportation.

- Barge Loading: The conveyor system will deposit material directly into barges stationed at the Right bank of the Essequibo River. The barges will be equipped to handle large volumes of sand and loam, ensuring efficient transport downstream.

- Barge Transport: The barges will then travel approximately 30 miles downstream on the Essequibo River, allowing the material to be transported to various markets or storage facilities located closer to coastal or urban areas. Barges offer a cost-effective solution for bulk transport, minimizing the need for overland trucking.

4. Material Handling and Stockpiling

Temporary stockpiles may be established near the conveyor loading area to ensure a continuous flow of material. These stockpiles will be managed to minimize dust and erosion.

- Stockpile Management: Stockpiles will be carefully monitored to ensure that they do not exceed capacity and are located away from water bodies to prevent contamination.
- Dust Control: Water spray systems and strategically placed barriers will be used to control dust during the stockpiling process, ensuring minimal environmental impact.

5. Safety and Environmental Management

Safety is a priority in open-pit mining operations, and several measures will be implemented to protect workers and the surrounding environment.

- Personal Protective Equipment (PPE): Workers will be equipped with the necessary PPE, including helmets, gloves, high-visibility vests, and safety boots, to prevent accidents.
- Emergency Response Plans: In case of emergencies, such as machinery failures or extreme weather conditions, the quarry will have well-established response plans to ensure the safety of all workers.
- Environmental Management: The site will follow stringent environmental guidelines, including:
- Dust control using water tankers and fogging systems.
- Noise mitigation by maintaining equipment and using noise-dampening technologies.
- Surface water management to prevent runoff and protect nearby water bodies, including the Essequibo River.

6. Reclamation and Land Rehabilitation

Post-extraction, the quarry will implement a land rehabilitation plan. The topsoil, which was initially stockpiled, will be redistributed across the site to facilitate revegetation. Native plant species will be reintroduced to restore the natural ecosystem, ensuring that the land is suitable for future use.

The open-pit mining operation at the Lakeram Harridat Sand & Loam Quarry will be an efficient, environmentally responsible process, focusing on the safe extraction, transportation, and loading of sand and loam onto barges. The use of modern equipment and conveyor systems will enhance productivity while minimizing environmental impacts and maintaining a safe working environment.

Environmental Management Plan (EMP)

The project proponent is committed to responsible environmental stewardship. The following measures will ensure minimal negative impacts on the surrounding ecosystem:

Dust and Noise Control

Water trucks will spray access roads and operational areas regularly to suppress dust, particularly during the dry season. Equipment will be maintained with noise-dampening features, and the quarry's rural location will help minimize disruption to nearby communities.

Land Rehabilitation

The project propent will implement land rehabilitation measures to restore the mined land for future use. Topsoil will be removed and stored for future reclamation. After mining operations are completed, native plant species will be reintroduced to promote biodiversity.

Water Management

Drainage systems will manage surface runoff, preventing contamination of nearby water sources. Sediment ponds will be constructed to trap sediment, ensuring that debris from operations does not affect local waterways.

Occupational Safety and Health (OSH) Plan

Safety is a priority for Trident's operations. The following protocols will be enforced to ensure a safe working environment:

Personal Protective Equipment (PPE)

All workers will be provided with PPE, including helmets, safety vests, steel-toe boots, gloves, and hearing protection. PPE use will be mandatory.

Equipment Safety

- All operators will receive training to ensure safe machinery handling.
- Equipment will undergo daily safety inspections to ensure operational integrity.
- Emergency stop procedures will be clearly marked and accessible on all machines.

Emergency Response Plan

A robust emergency response plan will be in place:

- Fire Safety: Fire extinguishers will be located strategically across the site.
- First Aid: First aid kits will be available, and designated personnel will be trained in first aid.
- Evacuation Routes: Clearly marked evacuation routes will be implemented, and personnel will receive regular training.

Health Monitoring

Routine health check-ups will be provided to monitor workers' exposure to dust and noise, ensuring long-term health and well-being.

Socio-Economic Benefits of the project

The Project is poised to deliver a wide range of socio-economic benefits to both local communities and the broader economy of Guyana. These benefits extend beyond direct employment and revenue generation, impacting infrastructure development, skill enhancement, and community engagement.

1. Job Creation and Employment Opportunities

The quarry project will generate significant employment opportunities for local communities, particularly in regions surrounding the Essequibo River and the project site. This will include both direct and indirect employment in various sectors:

- Direct Employment: The project will require a skilled and semi-skilled workforce, including:
- Excavator Operators
- Front-End Loader Operators
- Barge Crew
- Conveyor System Operators
- Safety Officers
- Administrative Staff

Approximately 30-40 jobs are expected to be created directly within the quarry operations.

- Indirect Employment: The project will also create indirect jobs in industries supporting the quarry's operations, including:
- Equipment Maintenance: Local businesses will benefit from contracts to maintain heavy equipment, conveyors, and other machinery.
- Logistics and Transportation: Employment will be created in the transport sector, including barge operators, fuel suppliers, and logistics coordinators.

- Suppliers and Vendors: Local businesses supplying goods and services, such as fuel, safety equipment, and construction materials, will also benefit from the increased demand generated by the project.

2. Skills Development and Training

The project will provide opportunities for the development of technical skills and vocational training in the local workforce. The project proponent is committed to investing in the professional development of its employees, ensuring a long-term, sustainable workforce. Key areas of skill development include:

- Heavy Equipment Operation: Training programs will be offered to operators of excavators, loaders, and conveyor systems, improving their skills and enhancing job prospects.
- Safety Standards: Workers will receive specialized training on safety protocols, personal protective equipment (PPE) usage, and emergency response, ensuring adherence to best practices in occupational safety.
- Environmental Management: Employees will be trained in sustainable quarrying practices, including dust control, water management, and reclamation strategies.

3. Contribution to Local Infrastructure Development

The sand and loam extracted from the quarry will directly support local infrastructure projects by providing essential raw materials for construction. These materials will be used in:

- Road Construction: Sand is a critical component for roadbeds, foundations, and other civil engineering projects. The project will contribute to the development and maintenance of roads, bridges, and highways in the region.
- Building Construction: Loam and sand will support the construction of residential, commercial, and public buildings in both urban and rural areas.
- Agricultural Land Improvement: Loam is a valuable resource for improving soil quality, which will help enhance agricultural productivity in the surrounding areas.

4. Revenue Generation and Economic Growth

The quarry project will generate significant revenue streams for the local economy and the national government through various channels:

- Taxes and Royalties: The project will contribute to the national economy through corporate taxes, mining royalties, and export duties. These funds will support public services and infrastructure development across Guyana.
- Local Business Growth: By sourcing materials and services locally, the project will stimulate growth in the local business community, increasing demand for goods and services.

5. Community Engagement and Development

The project proponent is committed to engaging with local communities near the project site, ensuring that the project aligns with their social and economic needs. This will include:

- Community Liaison: Appointing community liaison officers to maintain open communication with residents, ensuring that their concerns and suggestions are considered during the project's operation.
- Support for Local Initiatives: The project will invest in local community initiatives, such as education, healthcare, and infrastructure improvements, enhancing the overall quality of life in the region.

6. Environmental Sustainability and Land Reclamation

While the quarry will be a significant source of economic development, the project will also focus on minimizing environmental impacts and ensuring that land is restored for future use post-mining. This includes:

- Land Reclamation: After extraction, the land will be restored to a state that supports agricultural or commercial use, benefiting future generations.
- Sustainable Practices: The project will implement dust control, water management, and reclamation measures that minimize the environmental footprint of operations, ensuring long-term sustainability for the local ecosystem.

7. Long-Term Economic Stability

With a projected lifespan of 20 years, the sand and loam quarry project will contribute to the long-term economic stability of the region. This extended period of operation provides:

- Sustained Employment: Stable employment over the life of the quarry, allowing workers to build long-term careers and support their families.
- Ongoing Revenue Generation: Consistent tax and royalty contributions to the government over the quarry's lifespan will support public services and infrastructure investment.

The Project will deliver substantial socio-economic benefits to the local community, the region, and the national economy of Guyana. By providing employment, contributing to infrastructure development, and supporting local businesses, the project will play a vital role in the long-term development of the region. Additionally, the focus on environmental sustainability and community engagement ensures that the project aligns with broader social and economic goals for the country.

Need for the Project

This sand and loam quarry project is critical to meet the rising demand for construction materials in Guyana. As the country's infrastructure development accelerates, there is a significant need for high-quality sand and loam to support various construction applications. The demand is driven by a surge in public infrastructure projects, residential and commercial construction, and roadworks, all of which rely heavily on these materials.

Key factors driving the need for the project in the construction sector include:

1. Government Infrastructure Projects: The Government of Guyana is investing heavily in infrastructure, particularly roads, bridges, and public facilities. Sand and loam are essential for constructing and maintaining these projects. Sand is widely used in concrete production, while loam plays a crucial role in roadworks for stabilizing foundations and preventing soil erosion.

2. Urban and Rural Development: The rapid expansion of urban areas and the development of rural communities have increased the demand for construction materials, especially sand and loam, for building new residential, commercial, and industrial structures.

3. Road Construction and Maintenance: Road infrastructure is a priority for both urban and rural development. Loam, known for its soil-binding properties, is frequently used in roadworks to create stable, compact surfaces. It is often laid beneath roads and highways to provide a smooth foundation, ensuring durability, and reducing wear on the asphalt or concrete surface.

Uses of Sand and Loam in the Construction Sector

Both sand and loam serve essential functions in construction, particularly in building and roadworks.

- Concrete Production (Sand): Sand is a vital component in concrete, used for constructing buildings, bridges, and other infrastructure. The strength and durability of concrete directly depend on the quality of the sand used in its production.
- Road Construction and Foundations (Loam and Sand): In roadworks, loam is used for creating a stable base layer beneath the road surface, helping to prevent settling, erosion, and water drainage issues. It binds well with other materials, reducing soil displacement and maintaining the integrity of the road foundation. Sand is used in road surfaces (asphalt or concrete) to improve grip and ensure durability.
- Earthworks and Foundation Preparation: Sand is a popular choice for leveling and filling during the construction of building foundations. Loam, on the other hand, helps in soil stabilization around foundations and construction sites, preventing soil erosion and improving drainage.

- Cement Blocks, Mortar, and Paving: Sand is also crucial in the manufacture of cement blocks, mortar, and paving materials. These materials are integral to constructing walls, pathways, and structural elements of buildings.

Closing the Supply-Demand Gap for Construction Materials

- Currently, there is a significant gap between the supply of locally sourced sand and loam and the growing demand in Guyana's construction sector. This shortage forces construction companies to import materials at higher costs, leading to project delays and increased budgets. The project aims to:
- Provide a stable, local supply of high-quality sand and loam to meet the demands of the construction industry.
- Reduce reliance on imported materials, cutting costs and project delays.
- Offer competitive pricing at USD $9 per ton, making construction and infrastructure projects more affordable and accessible.

Reserve Estimation

This is a detailed analysis of the sand and loam extraction volumes, calculated for a 740-acre site with a 30-foot cut-off depth. The extraction is projected over a 20-year period, with the volumes calculated annually and over the entire life of the mine, expressed in both cubic meters and metric tons.

Size of Proposed Property = 740 acres

Area of mine in phase 1 = 40 acres

Depth to bedrock = 30 m

Depth of mine = 10 m

Bulk density = 1600 kg/m^3

Mineral Property (740 acres)

1acre = 4046.86 m^2

Tonnage = V x BD

V= A x H

Total area in m2 = 740 x 4046.86 = 2,994,528 m2

V = 2,994,528 m2 x 30 m = 89,835,852 m3

Tonnage = 89,835,852 m3 x 1600kg/m3

T = 143,73,363,200 x .001 = 143,737,363 Tonnes

Mine (40 acres) 1st Phase

Total area in m2 = 40 x 4046.86 = 161,874.4 m2

V = 161,874.4 m2 x 10 m = 1,618,744 m3

Tonnage = 1,618,744 m3 x 1600kg/m3

T = 2,589,990,400 x .001 = 2,589,990.4 Tonnes

The production target for the Project is 130,000 tons of sand and loam annually for a mine life of 20 years. Mining operations for the Project will be five (5) days per week, operating on one (1) eight (8) hour shift. Sand and loam will only be mined on dayshifts.

Futuristic Approach

As part of its commitment to optimizing operations, the project. is actively considering the implementation of several advanced technological solutions. These innovations are aimed at improving efficiency, ensuring safety, and minimizing the environmental impact of the sand and loam quarry project, while still relying on conventional heavy-duty machinery and customer-supplied trucks for transport.

1. GPS-Enabled Fleet Management and Equipment Tracking

The project team is evaluating the use of GPS-enabled tracking systems to monitor the movement and performance of excavation and loading equipment. This will help the company optimize the deployment of machinery and ensure efficient resource utilization.

- GPS for Equipment: By equipping excavators and loaders with GPS systems, the company will be able to track the location and movement of equipment in real-time, reducing delays and improving operational efficiency.
- Real-Time Monitoring: the project proponent is exploring the option of integrating real-time monitoring tools to track fuel consumption and operational hours, helping to identify areas where improvements can be made.

2. Real-Time Data Monitoring and Predictive Maintenance

To reduce downtime and increase the reliability of its machinery, the project proponent is considering the implementation of real-time data monitoring and predictive maintenance systems. These technologies will allow for better equipment management by anticipating maintenance needs based on usage data.

- IoT Sensors for Equipment Health: Installing sensors on heavy machinery will provide data on wear and tear, enabling the company to address maintenance needs before they cause breakdowns.
- Predictive Maintenance: The use of predictive maintenance tools will allow us to plan servicing schedules, thereby reducing operational disruptions and prolonging the lifespan of the equipment.

3. Drones for Site Surveying and Monitoring

The project is also considering the use of drones to conduct aerial surveys and monitor the quarry's progress. Drones can provide real-time data on stockpile levels, extraction zones, and environmental conditions.

- Aerial Surveys: Drones will be used to map the quarry site with high precision, allowing for better planning and resource management.
- Progress Tracking: Regular drone flights will monitor ongoing operations, ensuring that work stays on schedule and within the boundaries defined by the regulatory authorities.

4. Advanced Dust Control Systems

To enhance environmental compliance and improve working conditions, The project is exploring smart dust control systems that can automatically adjust water spray levels based on dust conditions in the quarry.

- Automated Water Spraying: The project is considering systems that can detect dust levels and adjust the amount of water sprayed accordingly, minimizing water waste while ensuring effective dust control.
- Fog Cannons: We may also introduce fog cannons at key locations, such as loading zones and stockpiles, to capture airborne dust and maintain air quality standards.

5. Energy-Efficient Machinery and Renewable Energy Solutions

We are evaluating the potential use of energy-efficient machinery and renewable energy sources to reduce operational costs and minimize environmental impacts.

- Hybrid or Electric Equipment: The project is exploring options for introducing hybrid or electric-powered excavators and loaders, which will reduce fuel consumption and emissions while maintaining productivity.
- Solar Power: We are considering installing solar panels to power administrative buildings, lighting, and small-scale equipment, reducing the overall reliance on non-renewable energy sources.

6. Water Management Systems

Given the proximity to Ampa and mango creeks, effective water management systems are being considered to manage runoff and prevent contamination of nearby water sources.

- Water Recycling: We are assessing water recycling systems that could filter and reuse water for dust suppression and equipment cleaning, reducing the project's overall water footprint.
- Sediment Control: Trident is exploring systems to capture and manage sediment from runoff before it reaches nearby water bodies, ensuring the protection of local ecosystems.

7. Digital Twin Technology for Operational Optimization

To optimize resource allocation and improve decision-making, We are considering the implementation of Digital Twin technology. This technology creates a virtual model of the quarry, allowing the company to simulate different scenarios and plan operations more effectively.

- Operational Simulations: Digital Twin technology will enable the company to test various operational strategies, such as altering shift schedules or adjusting the layout of extraction zones, without disrupting actual operations.
- Maintenance Optimization: The digital twin can also predict when maintenance is required based on operational data, helping to avoid unexpected equipment failures and improve overall efficiency.

8. Worker Safety Technologies

Ensuring the safety of workers is a top priority, and we are considering the introduction of wearable safety devices and hazard detection systems to enhance the safety of its workforce.

- Wearable Devices: These devices can monitor the health and safety of workers in real-time, tracking environmental conditions and worker vitals to prevent accidents such as heat stress or overexposure to dust.
- Proximity Sensors: We are exploring the installation of proximity sensors on equipment to warn operators when workers or other machinery are too close, reducing the risk of collisions and accidents.

9. Automated Reporting and Compliance Management

We are evaluating the use of automated reporting systems to streamline compliance with environmental and operational regulations. These systems will automatically generate reports on production levels, environmental impact, and regulatory compliance, ensuring the company remains in line with legal requirements.

- Compliance Reporting: Automated systems will track and report on key environmental metrics such as water usage, dust levels, and sediment control, ensuring that the project complies with regulatory standards set by the Guyana Geology and Mines Commission (GGMC).
- Financial Reporting: These tools will also help the company monitor financial performance, including tracking revenue, operational costs, and profitability, allowing for better resource management.

By considering the integration of these technological innovations we aims to improve the efficiency and sustainability of the project. These technologies will help optimize production, ensure regulatory compliance, and enhance worker safety while maintaining a responsible approach to environmental management.

Financial Summary

This document presents the financial analysis of the project over a 20-year lifespan. The analysis assumes a selling price of USD 9 per ton of loam and considers the project's operational costs, revenue, and profits.

Key Assumptions:

- Annual Production: 130,000 metric tons of loam.

- Price per Ton: USD 9.

- Annual Operational Costs: USD 500,000.

- Lifespan of the Project: 20 years.

- Capital Equipment: Already owned (no additional capital costs).

- Customers Provide Barge: No barging costs incurred by the project proponent.

Revenue Analysis:

- Annual Revenue: With an annual production of 130,000 metric tons and a selling price of USD 9 per ton, the annual revenue is calculated as:

130,000 tons × 9 USD/ton = 1,170,000 USD/year

Appendices

Appendix 1 – Image of Proposed Fuel Storage Tank

Appendix 2- Cross-Sectional View of Containment Structure

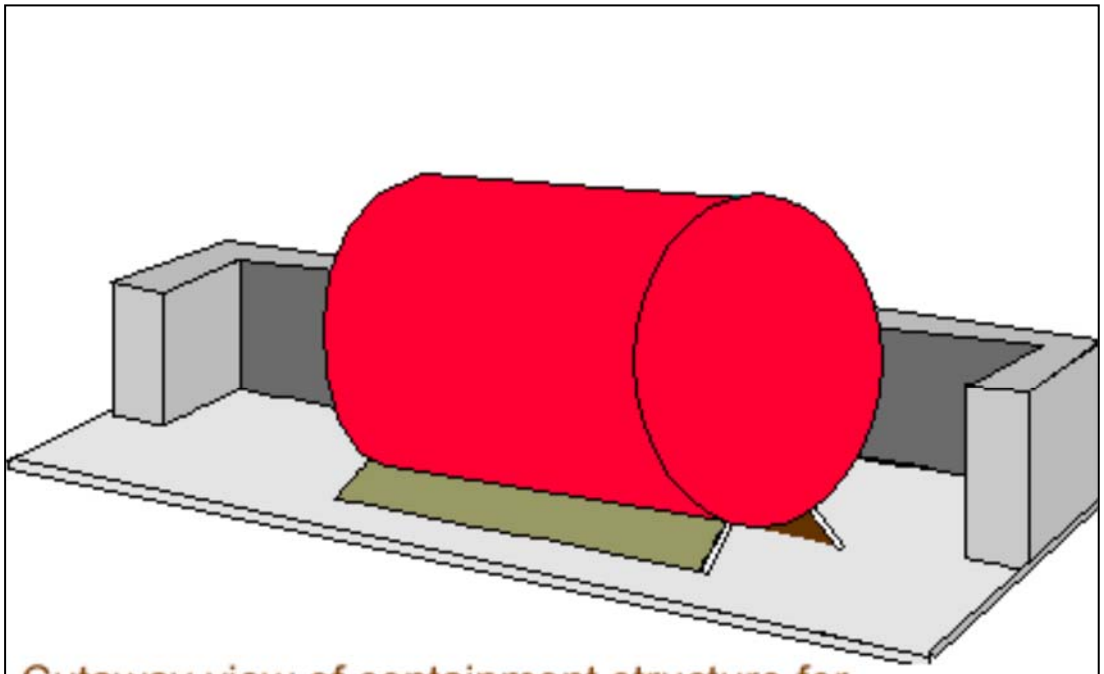

Cutaway view of containment structure for above-ground tank.

Appendix 3- Conceptual Representation of Closure

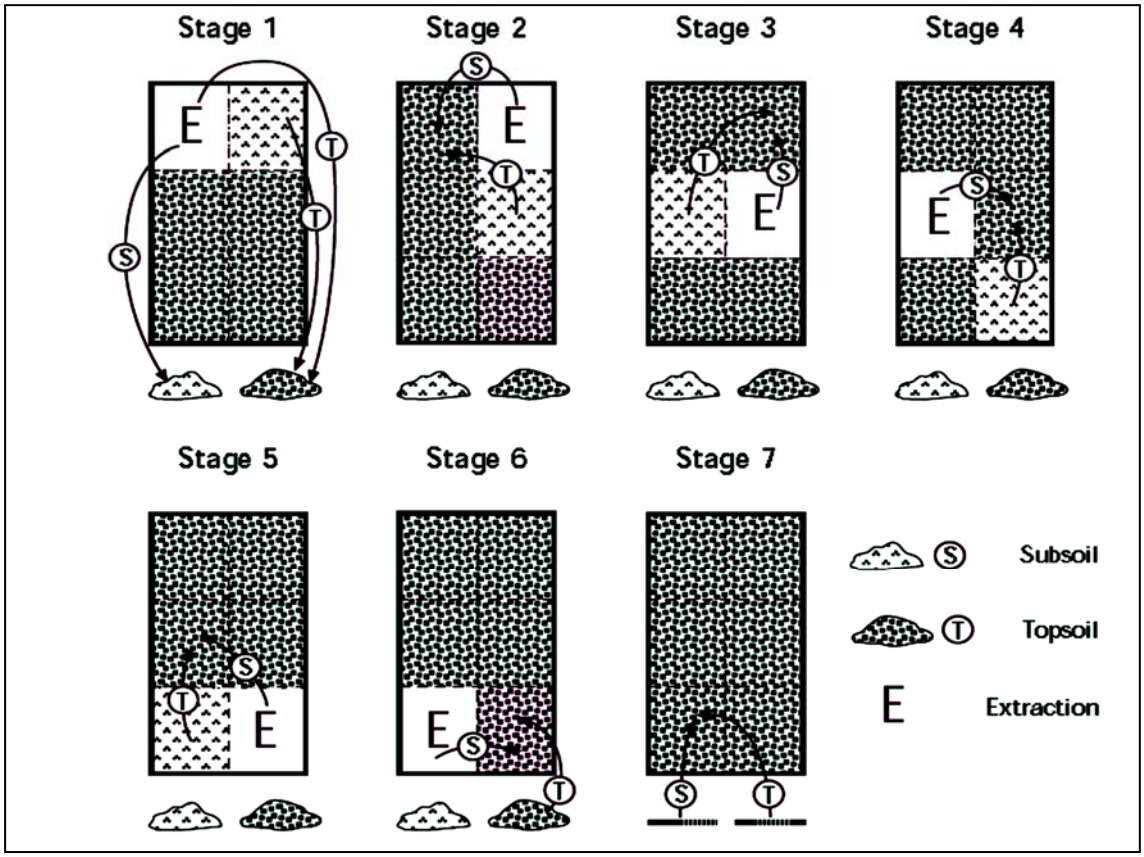

Appendix 4- Conception Sequence of Reclamation

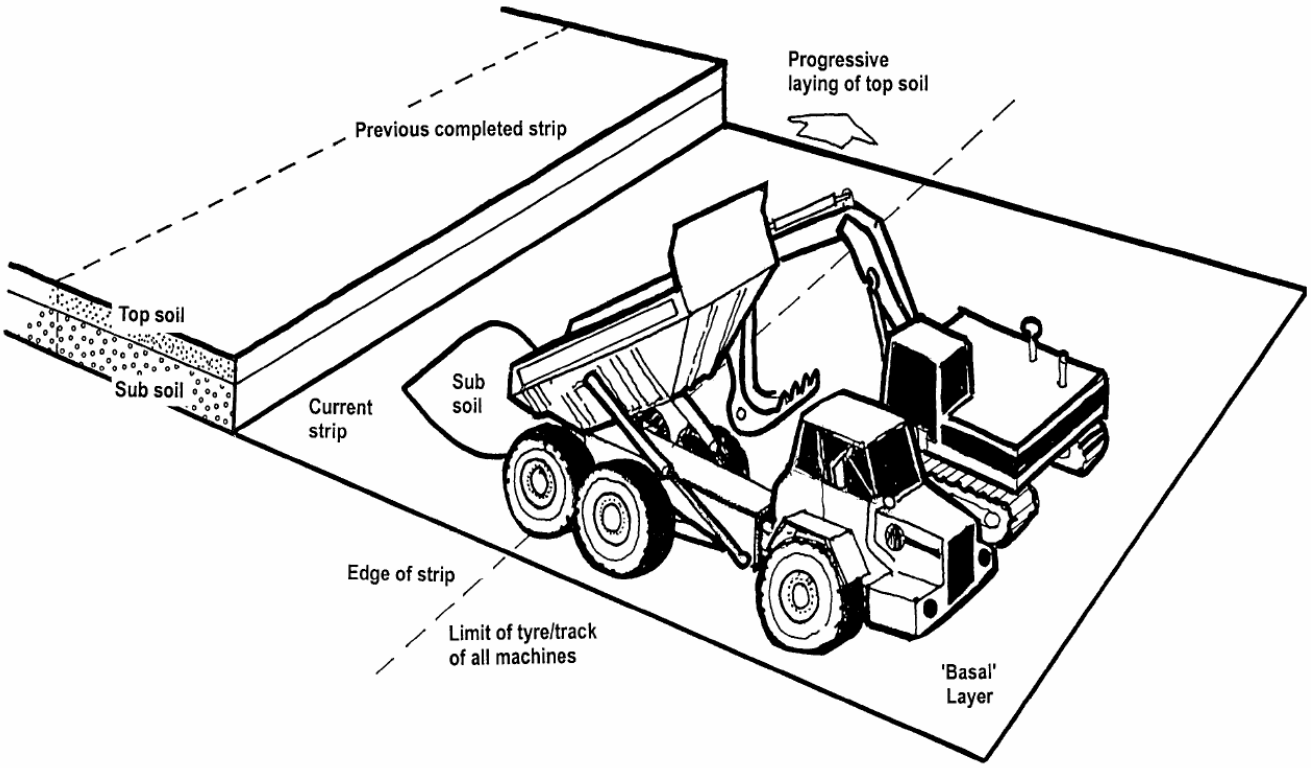

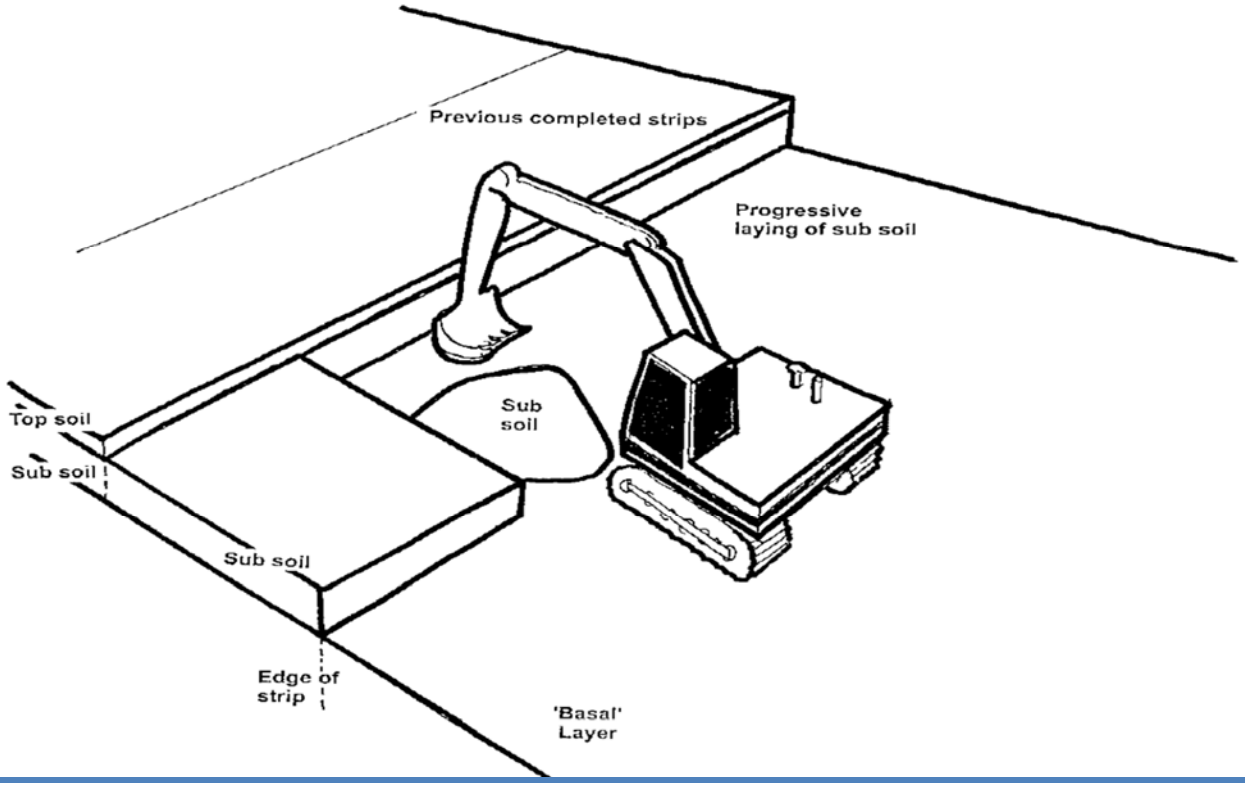

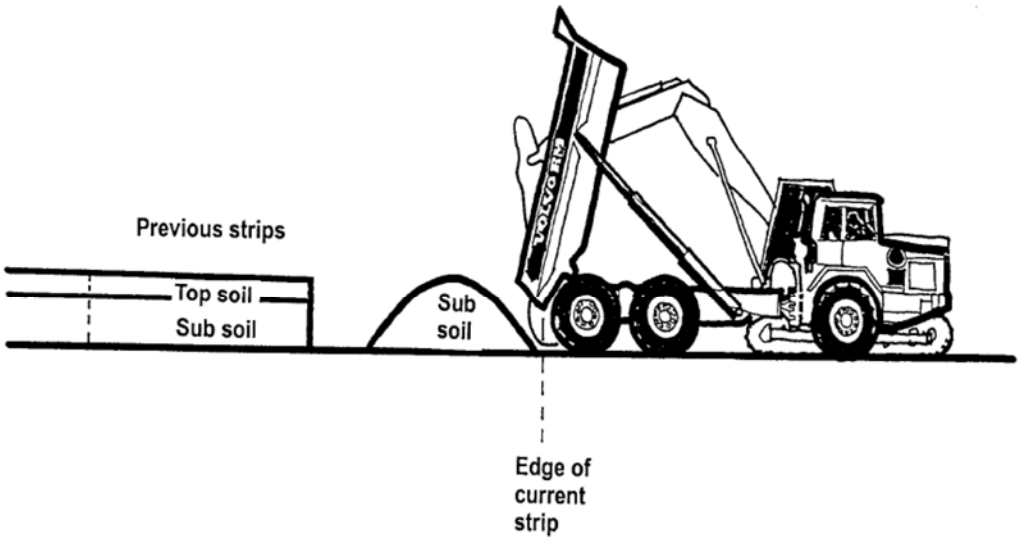
Previous strips
Top soil
Sub soil
Sub
soil
Edge of
current
strip

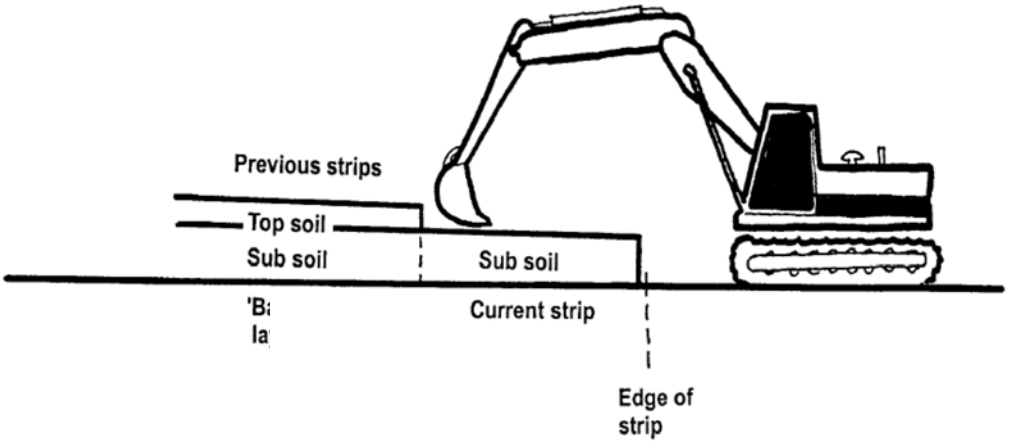
Previous strips
Top soil
Sub soil
Sub soil
Current strip
Edge of
strip